› Expansion Modules

Sandwich Communication Extensions

XN06-XN05

- Standard Modbus RS485 or TCP/IP protocol
- Connects one or several Millenium 3 to a touch screen, a supervision PC or a network gateway
- Exchange of the input/output state and/or internal values
- Updating date and time of a group of Millenium 3
- Power supply via the controller

XN06

XN05

Selection guide				
Type	Description	Supply	XN06	XN05
XN06	Modbus RS-485 (slave) communication extension	Via the 24 V⎓ controller	88972250	-
XN05	Ethernet protocol TCP/IP Modbus extension (Server)	Via the 24 V⎓ controller	-	88970270

	XN06	XN05
Specific characteristics		
Certifications	UL, CSA	
Grounding	Yes, refer to the quick reference guide supplied with the product	
Operating temperature	-20 → +55 °C (+40 °C in a non-ventilated enclosure) in accordance with IEC/EN 60068-2-1 and IEC/EN 60068-2-2	0 → +55 °C (+40 °C in a non-ventilated enclosure) in accordance with IEC/EN 60068-2-1 and IEC/EN 60068-2-3
Cable length	Maximum length of the network: 1000 m (9600 Baud maxi, AWG 26)	Maximum length between 2 controllers: 100 m
Communication parameters		
Type of link	2 or 4-wire; RTU or ASCII	-
Transmission rate (Bauds)	1200, 2400, 4800, 9600, 19200, 28800, 38400, 57600	-
Parity	None; even; odd	-
Addressing	1 → 247	Static or dynamic (BootP server)

Expandable Version

Expansion Modules

X R 06

- **Type**
  - **E:** Digital sandwich extensions
  - **R:** Digital termination extensions
  - **A:** Analog termination extensions
- **Version** — **X:** Expansion
- **Inputs/Output**
  - **03:** 3 Pt100
  - **04:** 1 analog / 2 analog
  - **05:** Ethernet
  - **06:** 4 digital / 2 relay
  - **10:** 6 digital / 4 relay
  - **14:** 8 digital / 6relay

X N 06

- **Type** — **N:** Sandwich communication extensions
- **Version** — **X:** Expansion
- **Communication**
  - **05:** Ethernet
  - **06:** Modbus

You have a project? Contact us on **www.crouzet.com**

Description:

Millenium3: The reference for more than 15 years

The Millenium3 is a versatile, powerful logic controller designed to meet the needs of a wide range of industrial applications. Its ease of use and flexibility make it ideal for automation professionals.

It offers high reliability and accuracy, making it a trusted choice for your automation needs.

For more information about *Millenium3*: please visit **www.crouzet.com**

	XN06	XN05
Characteristics of exchanges		
Ladder programming		
Image of smart relay I/O	4	-
Status	1	-
Function blocks programming		
Read-words	8	
Read/Write	8	
Clock words	12	4
"Status" words	1	
Schematics		
Footprint		
Version		

XN05-XN06

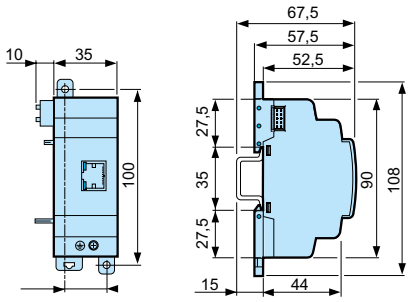

	XN06	XN05
Input/output installations: Extensions		
"Sandwich" communication extensions		

XN06

COM

PWR

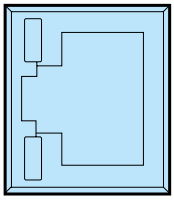

MB485-V1

XN05

LK/ACT 10/100

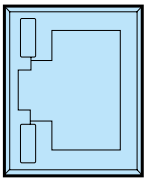

STS

Warning:

The product information contained in this catalogue is given purely as information and does not constitute a representation, warranty or any form of contractual commitment. Crouzet and its subsidiaries reserve the right to modify their products without notice. It is imperative that we should be consulted over any particular use or application of our products and it is the responsibility of the buyer to establish, particularly through all the appropriate tests, that the product is suitable for the use or application. Under no circumstances will our warranty apply, nor shall we be held responsible for any application (such as any modification, addition, deletion, use in conjunction with other electrical or electronic components, circuits or assemblies, or any other unsuitable material or substance) which has not been expressly agreed by us prior to the sale of our products.